FLYNET50

SMART WEIGHING INDICATOR

MADE IN ITALY

Keep in touch

BILANCIAI GROUP

Designed to be connected

The new generation **FLYNET50, FLYNET50i** and **FLYNET50ic** indicator are characterised by **high operating speed**, **intuitive use**, **easy data management** and, **sharing**, and **high** connectivity **performance**.

It represents the ideal solution for many applications:

- Vehicle recognition weighing, vehicle weighing with access control
- Weighing on bench or floor scales in industrial environments
- Pre-packed products control
- Manual dosing
- Waste weighing and traceability
- Part count
- Filling control

Plus all weighing processes that require a quick and reliable data exchange with company management systems.

Efficient data management

- Data sharing with a SQL server relational database for flexible data management.
- Export data in .CSV format by transferring them through FTP protocol or by saving them on a USB Flash Disk device.
- PC Windows application for remote database management.
- Possibility to archive the weighing ticket in PDF
- Automatic data transmission by e-mail (*e.g. weighing ticket PDF, malfunction warning messages such as out-of-paper messages etc.*)

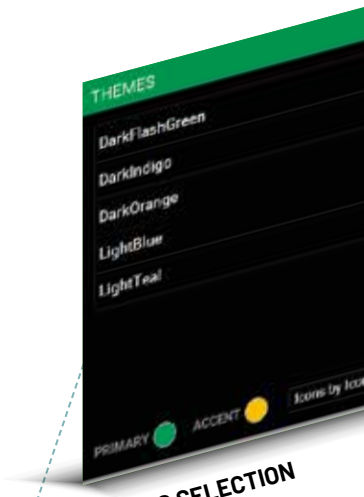

THEMES SELECTION

FLYNET50

FLYNET50 (WALL MOUNTED VERSIONO)

HIGHLIGHTS

- DIAGNOSTICS SYSTEM FOR ACCIDENTAL ERRORS
- AUTOMATION DEVICES MANAGEMENT
- HIGH PERFORMANCE CORE
- LAN CONNECTION
- VIRTUAL PRINTER FOR WEIGHING DOCUMENTS
- SECONDARY WIDE MONITOR VIA HDMI

DATA MANAGER

TOOLS SET

PRODUCT CODE DATA ENTRY

FLYNET50 i (IP 69K PROTECTION DEGREE)

FLYNET50 ic

Optionals Hardware

SERIAL OUTPUT CARD

It allows managing 2 additional serial outputs besides the two provided

- RS232, RS422, RS485 optoisolated formats
- Outputs on DSUB 9-pole connector
- Programmable Baud Rate

INPUT/OUTPUT CARDS

- There are 8 inputs and 12 outputs for each card
- Input: with galvanic insulation Vmax 24 Vdc
- Output: Optomos Vmax 24 Vac/Vdc Imax 200 mA
- Inputs/Outputs on 25-pole DSUB
- DSUB-25-pole interface cable / terminal block

Wi-Fi COMMUNICATION DEVICE

- External option (Bridge ETH/Wi-Fi)

DIGITAL-INPUT CARD/ANALOGUE OUTPUT-INPUT

Multi-purpose optional card

- 1 analogue output 0-10V/4-20 mA
- 2 impulse count inputs Freq max 2 kHz
- 1 analogue input 0-10 V/4-20 mA
- HDMI card for external repeaters

not available for Flynet 50 I

ANALOGUE SCALE INTERFACE CARD

- Internal resolution up to one million points, conversion speed up to 100 conversions/second
- Digital filters that can be customised by SW parameters

DIGITAL

- Optoinsulated RS485 interface with proprietary protocol
- Diagnostic management of digital cells (conversion, power supply, temperature, etc.)
- Automatic software correction of the eccentric load
- Cell power supply from 10 to 18 Vdc, it can be varied automatically depending on the cable length

FLYNET 50 equipped with STB Q3 printer

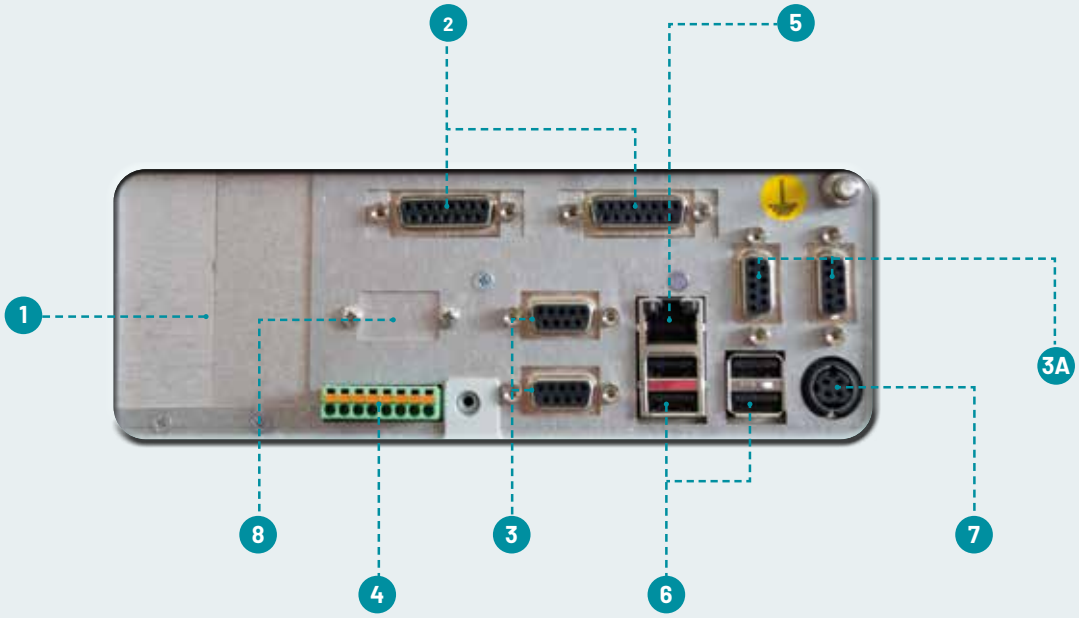

1) SLOT FOR OPTIONAL CARDS
   - I/O CARDS
   - ANALOGUE OUTPUT
2) SCALE 1
   SCALE 2 OPTIONAL
3) NO. 3 SERIAL PORTS
   RS 232/RS422 3A)
   NO. 2 OPTIONAL SERIAL PORTS
4) NO. 2 I/O OPTOISOLATED
5) ETHERNET PORT 10/100 MBPS
6) NO. 4 USB HOST PORTS
7) 12V POWER SUPPLY THROUGH EXTERNAL POWER SUPPLY UNIT
8) OPTIONAL HDMI OUTPUT
   not available for Flynet 50 I

Optionals Software

- **PDF PRINTER** for the printing of the weighing ticket in electronic form
- **NETWORK PRINTER** for the printing of the weighing ticket via a company network printer
- **FISCAL MEMORY/ALIBI MEMORY (mpp)** to ensure the traceability of the fiscal weighing when the data are sent to a third party operational system

FLYNET 50 IS ABLE TO INTERFACE WITH ALL MODERN IT DEVICES AVAILABLE ON THE MARKET

Connectivity

Technical features

FLYNET

		50	50 i	50 ic
PROCESSOR	DUAL CORE 1 GHZ	✓	✓	✓
RAM	512 MByte	✓	✓	✓
MEMORY	1 GByte Flash Memory on board	✓	✓	✓
DISPLAY	5.7" TOUCH SCREEN colour display, utilising TFT technology with LED backlight	✓	✓	✓
ETHERNET PORT	10/100 MBps	✓	✓	✓
USB	No. 4 USB ports Host A type (mouse, external keybord etc)	✓	✓	✓
SERIAL OUTPUTS	N° 3 RS232/RS422 + 2 RS232/RS422 OPTOISOLATED OPTIONAL serial outputs for connection to printers, repeaters, barcode readers, PC, etc.	✓	✓	✓
SLOT EXPANSIONS	2 slots for dedicated expansions (digital I/O, Analogue I/O, etc.)	✓	✓	✓
ALIBI MEMORY MPP	Alibi Memory/MPP Metrological Protocol	✓	✓	✓
MATERIAL	AISI 304 STAINLESS STEEL		✓	✓
POWER SUPPLY	UGH EXTERNAL TRANSFORMER 110/240 Vac (-15% ... +10%), 1.8 A, 50/60 Hz, 60W Max (included)	✓		✓
	DIRECT ON THE CPU 12 Vdc, 3 A (Min 11 Vdc - Max 15 Vdc)		✓	
	THROUGH INTERNAL TRANSFORMER L+N+R 110/240 Vac (-15% ... +10%), 1.8 A, 50/60 Hz, 60W Max		✓	
IT CAN BE CONNECTED	UP TO 2 ANALOGUE OR 2 DIGITAL SCALES	✓	✓	✓
SUPPLY VOLTAGE ANALOGUE LOAD CELLS	5VDC o 10VDC	✓	✓	✓
A/D CONVERTER	Sigma Delta 24 bits, digital filtering, +5VDC power supply, 6-wire connection	✓	✓	✓
MAX NO. OF ANALOGUE CELLS	12 cells with 350 Ohm impedance for each scale (12+12 in a duplex version)	✓	✓	✓
SUPPLY VOLTAGE DIGITAL LOAD CELLS	10-18 VDC	✓	✓	✓
MAX NO. OF DIGITAL CELLS	16 WITH ONE SCALE, 8+8 in the double scale version (duplex)	✓	✓	✓

CE Approval

Up to 6000 divisions
Multidivision and Multirange Versions
(3x3000 o 2x4000)

OIML Certificate

NTEP Approval

DESKTOP VERSION

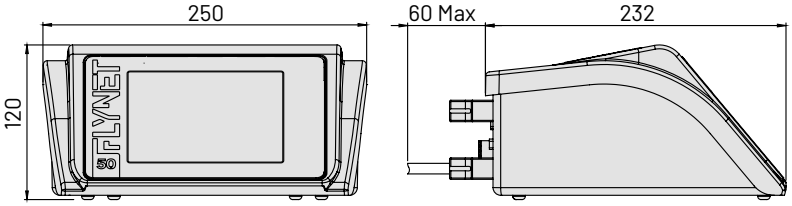

STB Q3 PRINTER

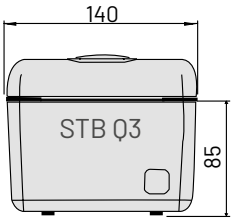

WALL MOUNTED VERSION

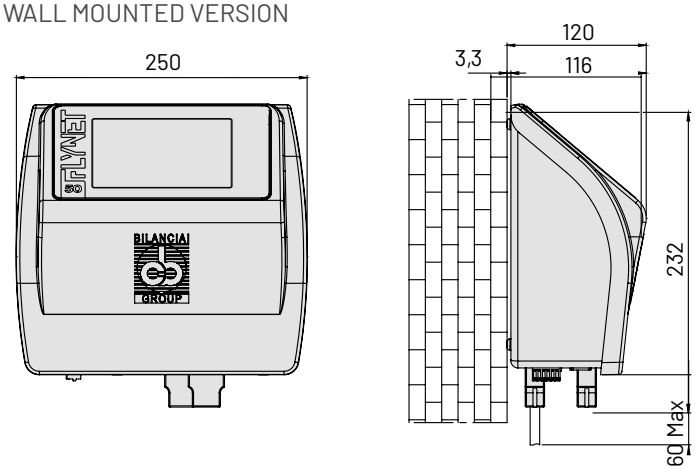

FLYNET50

DESKTOP VERSION

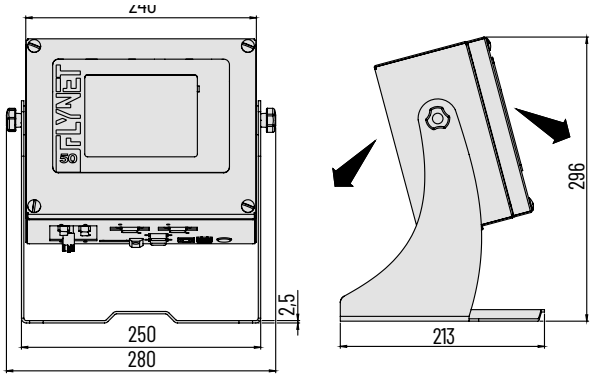

WALL MOUNTED VERSION

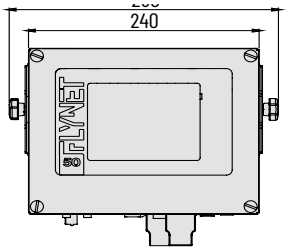

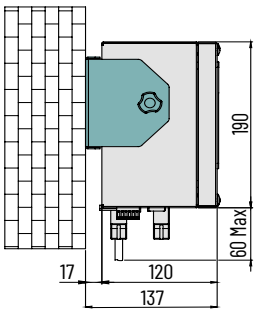

= Optional

FLYNET50 ic

DESKTOP VERSION

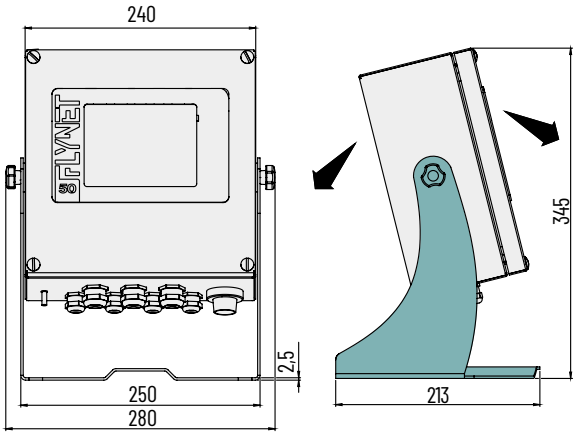

WALL MOUNTED VERSION

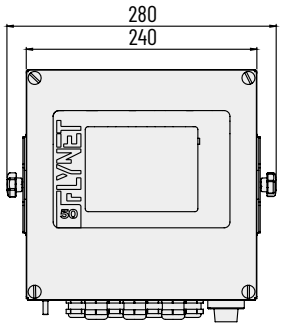

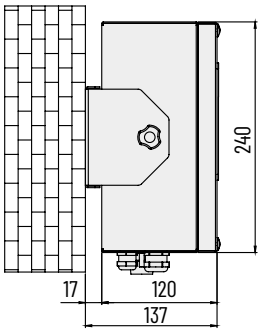

= Optional

FLYNET50 i

SOCIETA' COOPERATIVA
BILANCIAI
Weighing instruments and Technology

Società Cooperativa Bilanciai Campogalliano
41011 Campogalliano (MO) Italy - Via S. Ferrari, 16
Tel. 059 / 89.36.11 - Fax 059 / 52.70.79
www.coopbilanciai.it - cb@coopbilanciai.it

Agent / Dealer